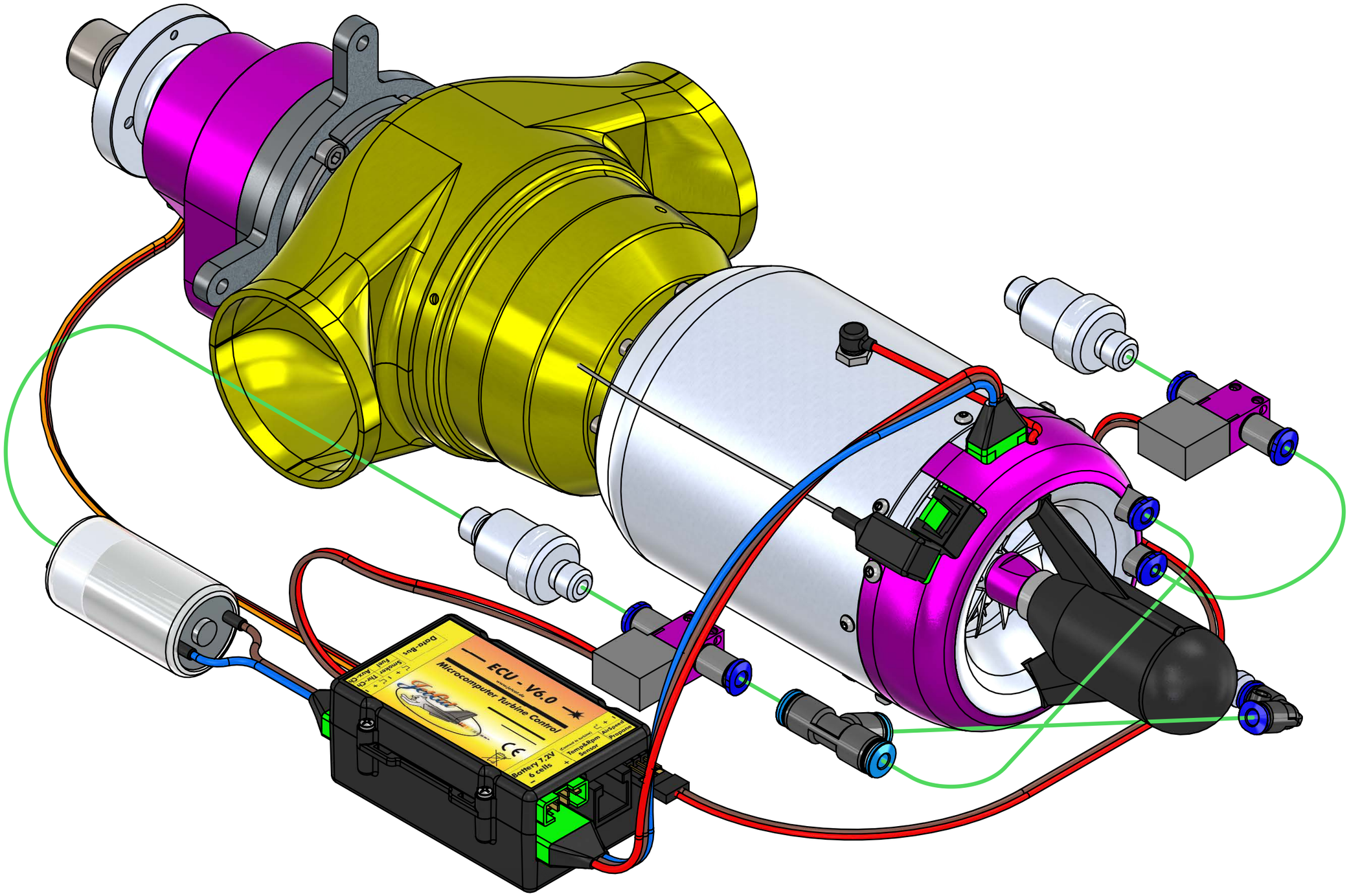
ECU - V6.0
Microcomputer Turbine Control
Data-Bus
Smoker
Fuel
Thr-Ch
Aux-Ch
Battery 7.2V
6 cells
Temp&Rpm
Sensor
AirSpeed
Propeller

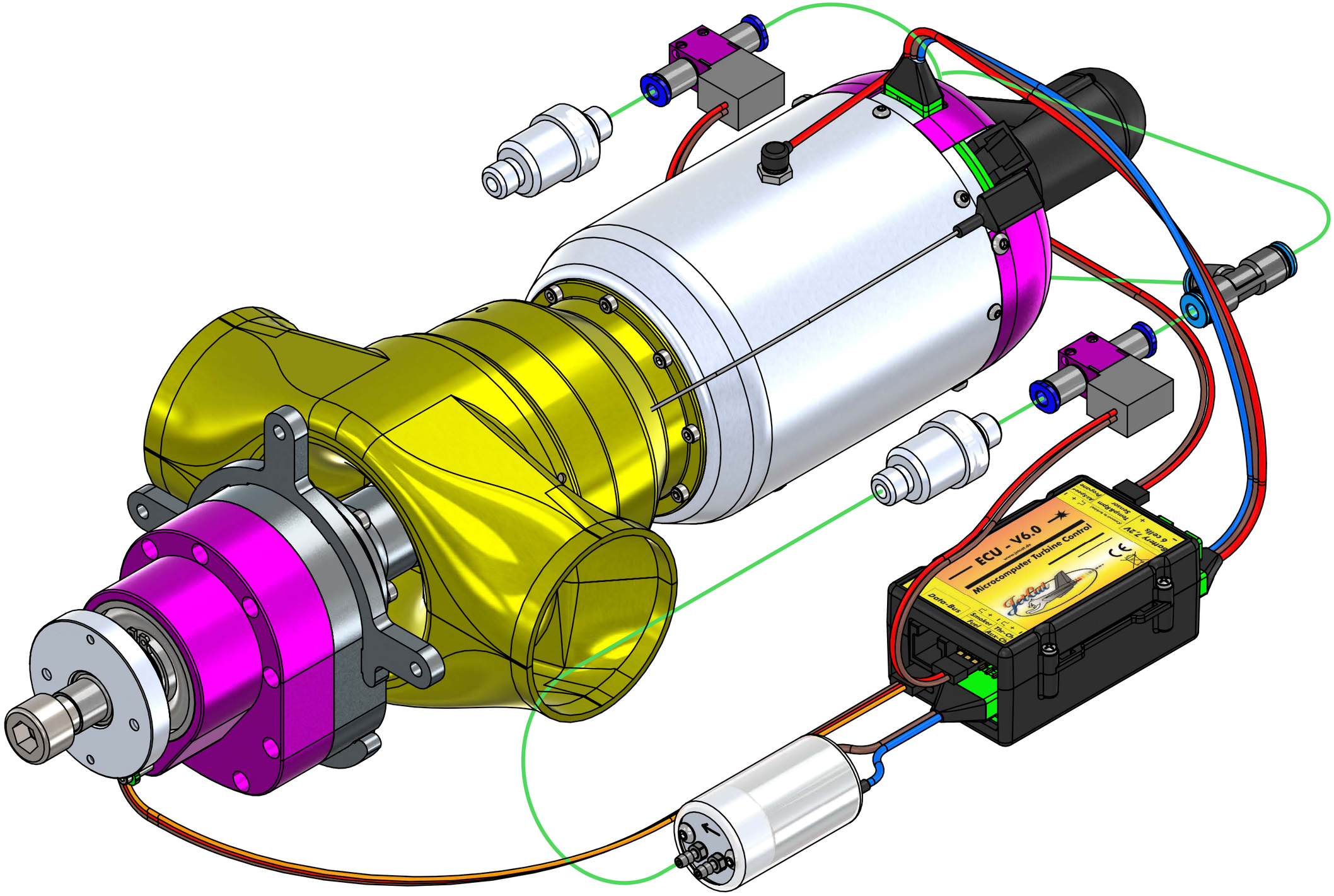
ECU - V6.0
Microcomputer Turbine Control
Data-Bus
Battery 7.2V
6 cells
Smoke
Fuel
Thr-Ch
Aux-Ch

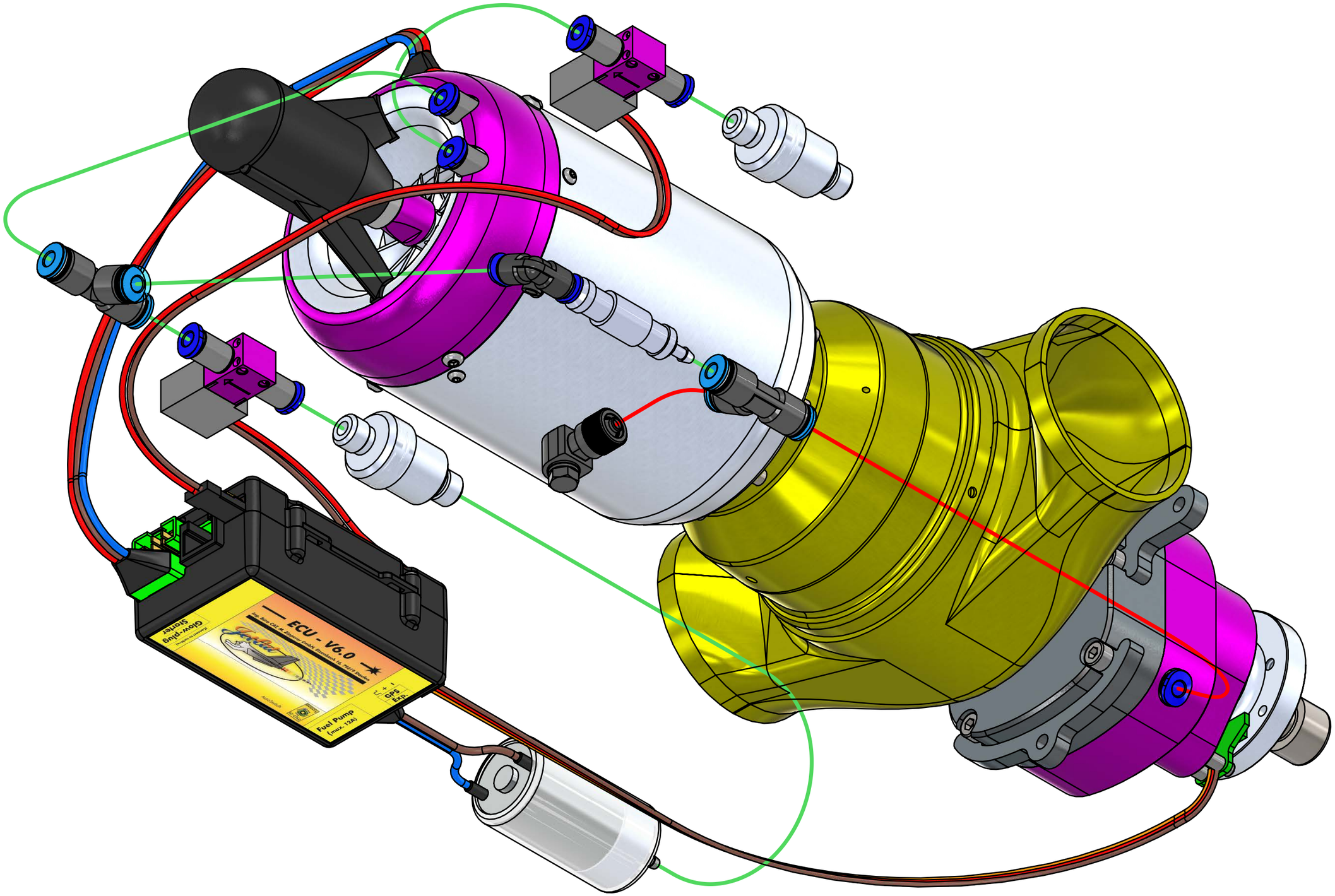
ECU - V6.0
Glow-plug
starter
Fuel Pump
(max. 12A)
GPS
Ext.